SECTION 2D

REAR SUSPENSION

CAUTION: Disconnect the negative battery cable before removing or installing any electrical unit or when a tool or equipment could easily come in contact with exposed electrical terminals. Disconnecting this cable will help prevent personal injury and damage to the vehicle. The ignition must also be in LOCK unless otherwise noted.

TABLE OF CONTENTS

SPECIFICATIONS

GENERAL SPECIFICATIONS

Application	Description
Lubrication	Wheel Bearing Lubricant GM P/N 1051344

FASTENER TIGHTENING SPECIFICATIONS

Application	N•m	Lb•Ft	Lb•In
Caulking Nuts	285	210	-
Crossmember to Body Bolts	110	81	-
Damper Rod to Strut Mount Nuts	80	59	-
Knuckle to Strut Assembly Nuts	120	89	-
Parallel Link to Crossmember Nuts	120	89	-
Parallel Link to Knuckle Nuts	135	100	-
Stabilizer Link to Strut Assembly Nuts	45	33	-
Stabilizer Shaft Clamp Bolts	37	27	-
Stabilizer Shaft to Stabilizer Link Nuts	45	33	-
Strut Mount to Body Nuts	45	33	-
Trailing Link Bracket to Body Bolts	90	66	-
Trailing Link to Knuckle Bolts	120	89	-
Trailing Link to Trailing Link Bracket Nuts	100	73	-

SPECIAL TOOLS

SPECIAL TOOLS TABLE

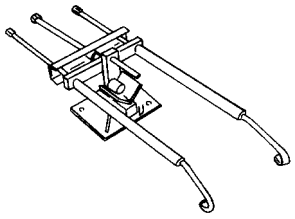 A106C031	**KM-329-A** **Spring Compressor**

DIAGNOSIS

EXCESSIVE FRICTION CHECK

Check excessive friction in the rear suspension as follows:

1. With the aid of a helper, lift up on the rear bumper and raise the vehicle as high as possible. Slowly release the bumper and allow the car to assume normal trim height.
2. Measure the distance from the floor to the center of the bumper.
3. Push down on the bumper, release slowly, and allow the car to assume normal trim height.
4. Measure the distance from the floor to the center of the bumper.

The difference between the two measurements should be less than 12.7 mm (0.50 inch). If the difference exceeds this limit, inspect the control arms for damage or wear.

STRUT DAMPENER

A strut dampener is basically a shock absorber. However, strut dampeners are easier to extend and retract by hand than are shock absorbers.

Struts Seem Weak

Checks	Action
Check the tire pressures.	Adjust the tire pressures to the specifications on the tire placard.
Check the load conditions under which the vehicle is normally driven.	Consult with the owner to confirm the owner's understanding of normal load conditions.
Check the compression and rebound effectiveness of the strut dampener.	Quickly push down and then lift up on the corner of the bumper nearest the strut dampener being tested. Compare the compression and rebound with those of a similar vehicle that has an acceptable ride quality. Replace the strut dampener, if needed.

Struts Are Noisy

Checks	Action
Check the mountings for looseness or damage.	Tighten the strut dampener. Replace the strut dampener, if needed.
Check the compression and rebound effectiveness of the strut dampener.	Quickly push down and then lift up on the corner of the bumper nearest the strut dampener being tested. Compare the compression and rebound with those of a similar vehicle that has an acceptable ride quality. Replace the strut dampener, if needed.

Leaks

Checks	Action
Check for a slight trace of fluid.	The strut dampener is OK.
Check the seal cover on the fully extended strut.	Replace the strut dampener.
Check for an excessive amount of fluid on the strut dampener.	Replace the strut dampener.

COMPONENT LOCATOR

REAR SUSPENSION

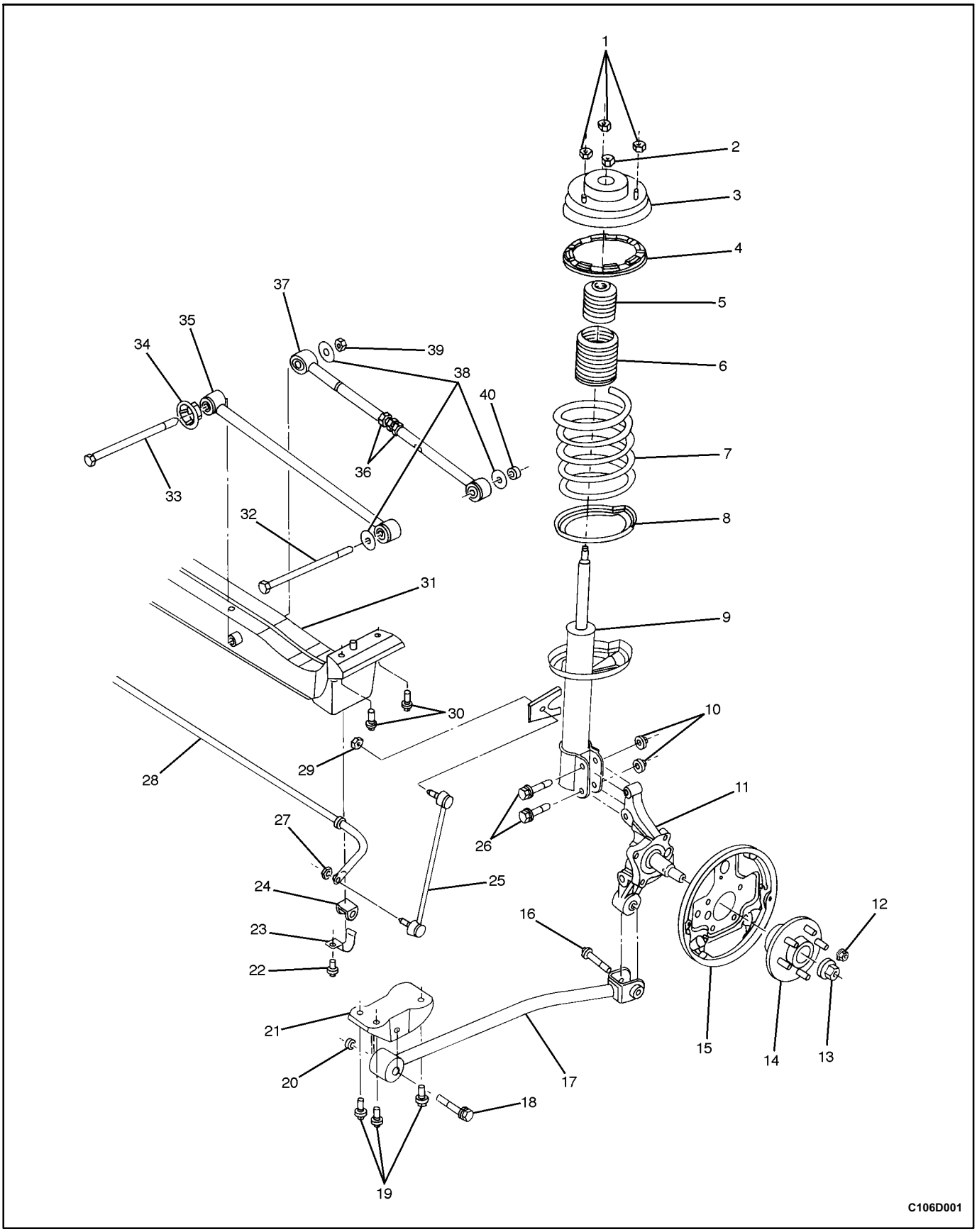

1 Strut Assembly to Body Nut
2 Strut Mount Lock Nut
3 Strut Mount
4 Rear Spring Upper Insulator
5 Hollow Bumper
6 Strut Dampener Dust Cover
7 Rear Spring
8 Rear Spring Lower Insulator
9 Strut Dampener
10 Strut Assembly to Knuckle Nut
11 Rear Knuckle
12 Wheel Nut
13 Caulking Nut
14 Hub and Bearing Assembly
15 Rear Brake Plate
16 Trailing Link to Knuckle Bolt
17 Trailing Link
18 Trailing Link to Trailing Link Bracket Bolt
19 Trailing Link Bracket to Body Bolts
20 Trailing Link to Trailing Link Bracket Nut
21 Trailing Link Bracket
22 Stabilizer Shaft Insulator Clamp Bolt
23 Stabilizer Shaft Insulator Clamp
24 Stabilizer Shaft Insulator
25 Stabilizer Link
26 Strut Assembly to Knuckle Bolts
27 Stabilizer Shaft to Stabilizer Link Nut
28 Stabilizer Shaft
29 Stabilizer Link to Strut Assembly Nut
30 Rear Crossmember to Body Bolt
31 Rear Crossmember
32 Parallel Link to Knuckle Bolt
33 Parallel Link to Crossmember Bolt
34 Parallel Link Cap
35 Front Parallel Link
36 Rear Toe Adjusting Screw Jam Nut
37 Rear Parallel Link
38 Washer
39 Parallel Link to Crossmember Nut
40 Parallel Link to Knuckle Nut

MAINTENANCE AND REPAIR

ON-VEHICLE SERVICE

STRUT ASSEMBLY

Removal Procedure

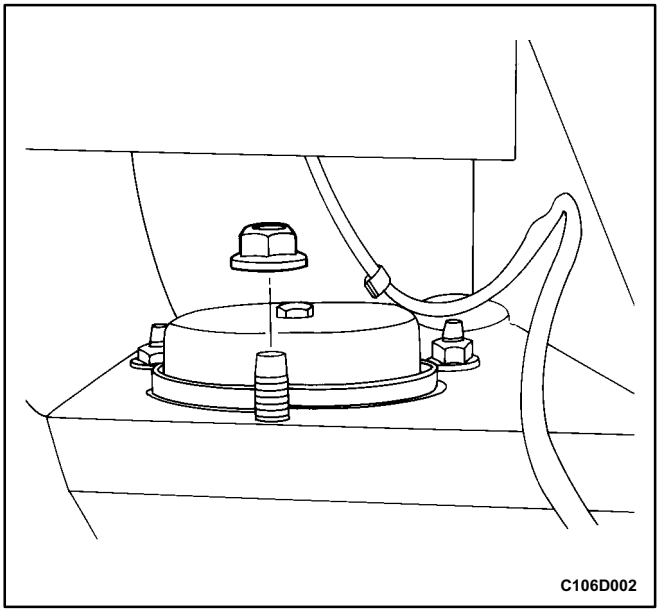

1. Remove the rear seatback. Refer to *Section 9H, Seats*.
2. Remove the rear strut mount to body nuts.

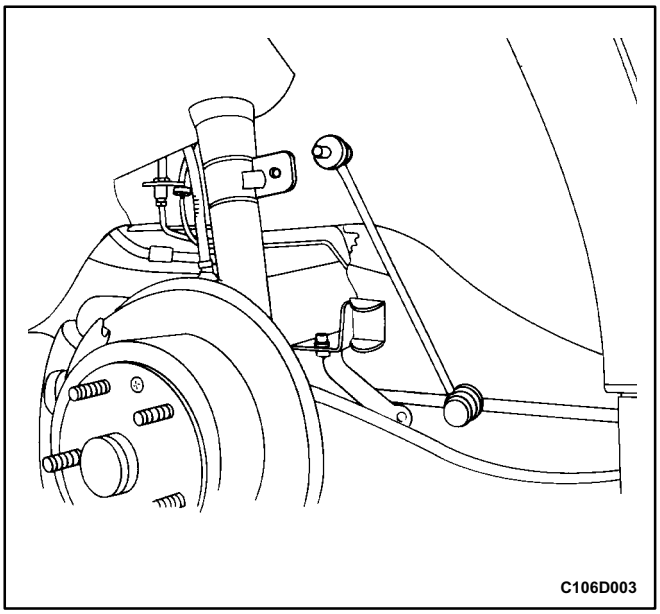

3. Raise and suitably support the vehicle.
4. Remove the wheel. Refer to *Section 2E, Tires and Wheels*.
5. Remove the stabilizer link to strut assembly nut and disconnect the stabilizer link from the strut assembly.
6. Remove the clip holding the brake hose to the strut assembly. Refer to *Section 4E, Rear Brakes*.

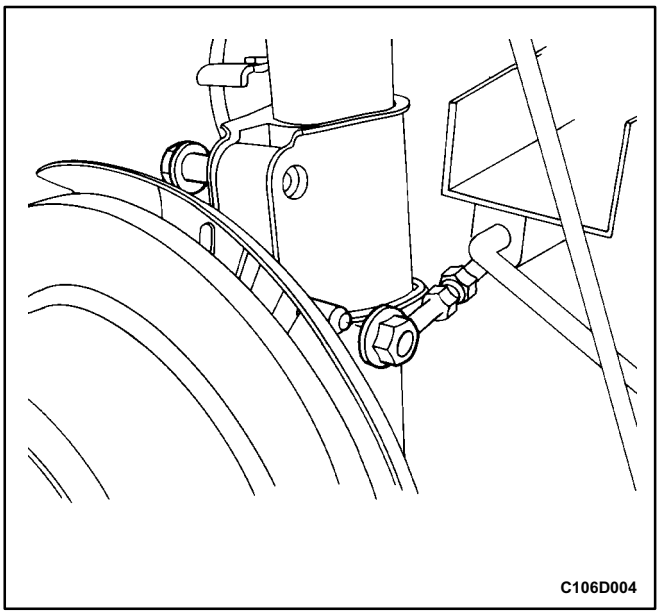

7. On vehicles equipped with the antilock brake system, disconnect the ABS sensor line from the rear of the strut assembly. Refer to *Section 4F, Antilock Brake System and Traction Control System*.
8. Remove the brake caliper from the rotor. Support the brake caliper. Refer to *Section 4E, Rear Brakes*.
9. Remove the knuckle to strut assembly nuts and the bolts.

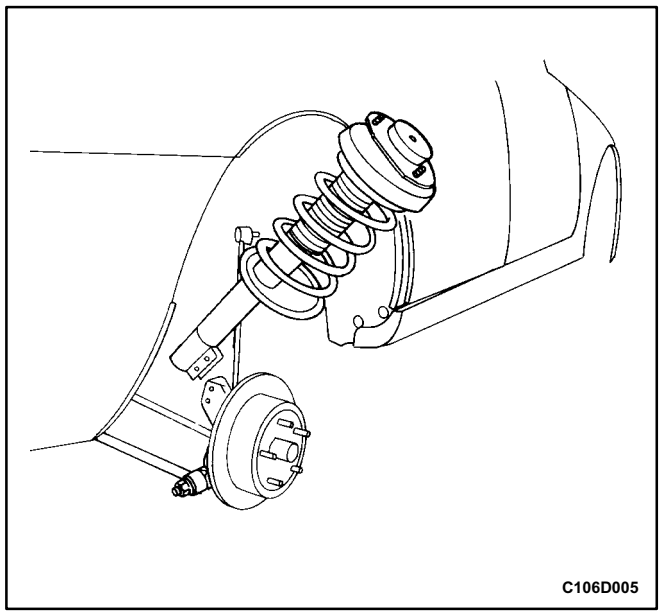

10. Remove the rear strut assembly from the vehicle.

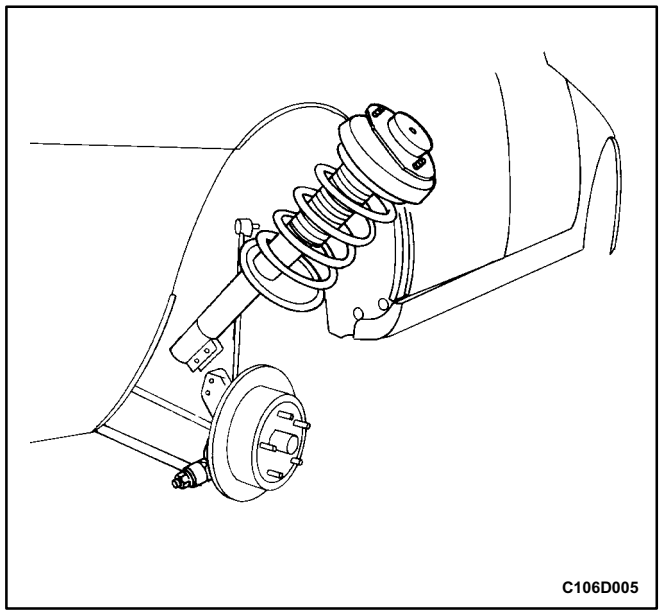

Installation Procedure

1. Install the rear strut assembly into the vehicle.

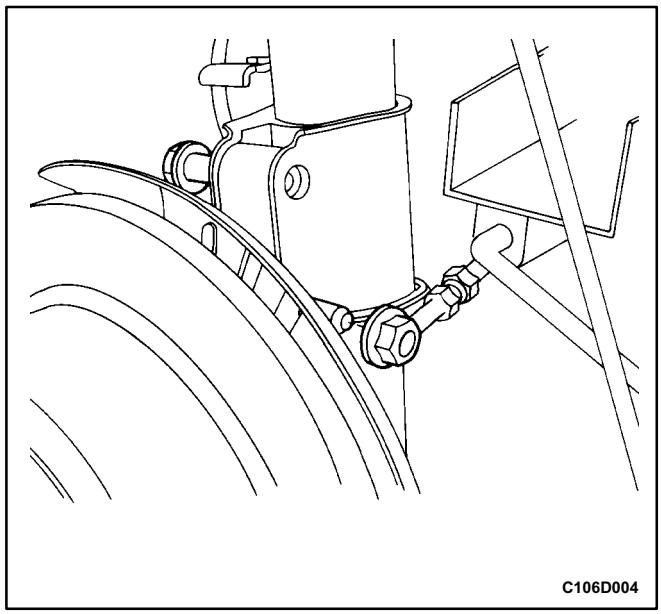

2. Install the knuckle to strut assembly nuts and bolts.

Tighten

Tighten the knuckle to strut assembly nuts to 120 N•m (89 lb•ft).

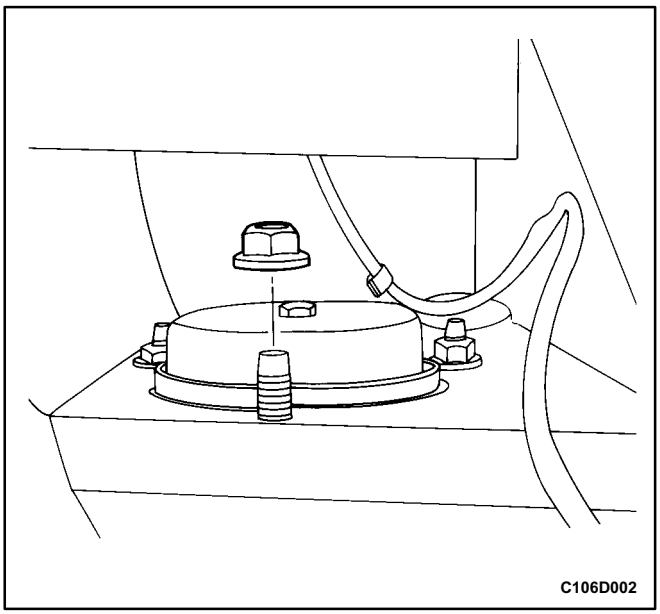

3. Lower the vehicle. While a second technician holds the strut assembly in place, attach the strut mount to body nuts.

   Tighten

   Tighten the strut mount to body nuts to 45 N•m (33 lb•ft).
4. Install the rear seatback. Refer to *Section 9H, Seats*.
5. Install the brake caliper onto the rotor and install the clip holding the brake hose to the strut assembly. Refer to *Section 4E, Rear Brakes*.

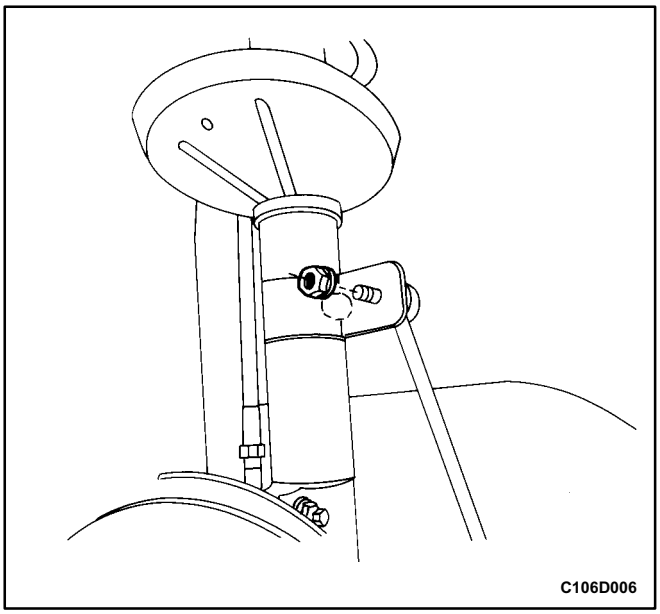

6. On vehicles equipped with the antilock brake system, connect the ABS sensor line to the rear of the strut assembly. Refer to *Section 4F, Antilock Brake System and Traction Control System*.
7. Connect the stabilizer link to the strut assembly and install the stabilizer linktostrut assembly nut.

   Tighten

   Tighten the stabilizer link to strut assembly nut to 45 N•m (33 lb•ft).
8. Install the wheel. Refer to *Section 2E, Tires and Wheels*.
9. Lower the vehicle completely.

KNUCKLE ASSEMBLY

Removal Procedure

1. Raise and suitably support the vehicle.
2. Remove the wheel. Refer to *Section 2E, Tires and Wheels*.
3. On vehicles equipped with the antilock braking system, remove the ABS speed sensor. Refer to *Section 4F, Antilock Brake System and Traction Control System*.
4. Remove the clip securing the brake line to the strut assembly. Remove the brake caliper from the rotor and support the caliper. Refer to *Section 4E, Rear Brakes*.
5. Disconnect the parking brake from the knuckle assembly. Refer to *Section 4G, Parking Brake.*
6. Disconnect the front and rear parallel links from the knuckle. Refer to „Parallel Links” in this section.
7. Disconnect the rear trailing link from the rear knuckle. Refer to „Rear Trailing Link” in this section.

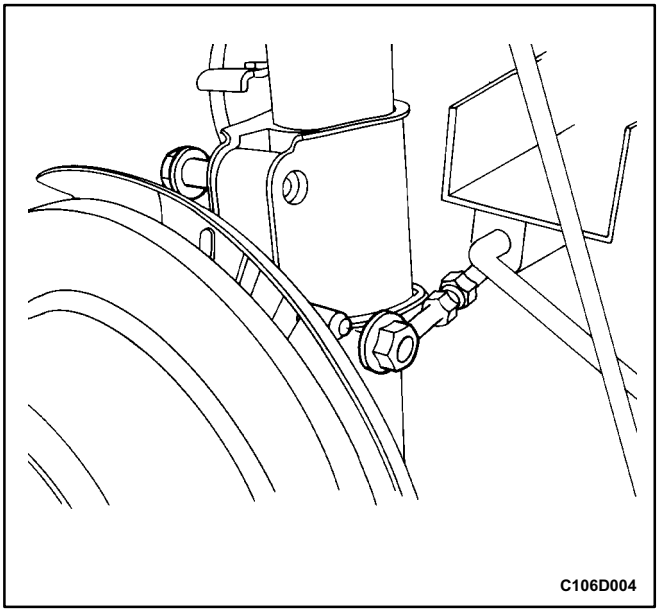

8. Remove the rear knuckle to strut assembly nuts and the bolts.

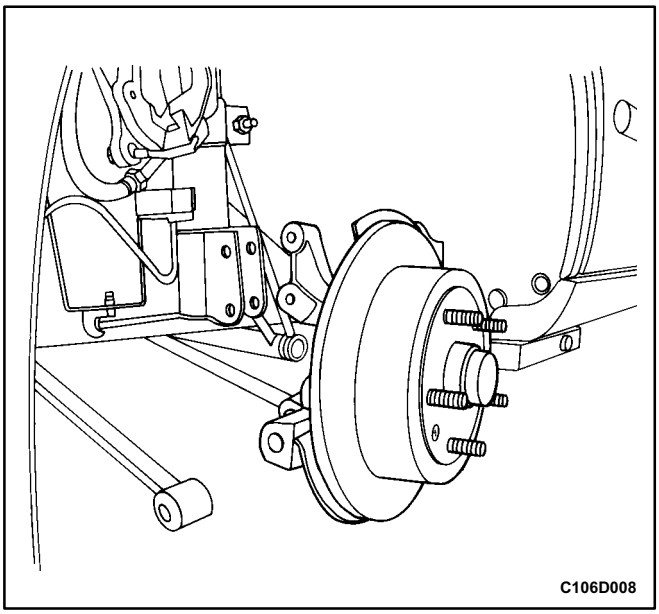

9. Remove the rear knuckle from the strut assembly.

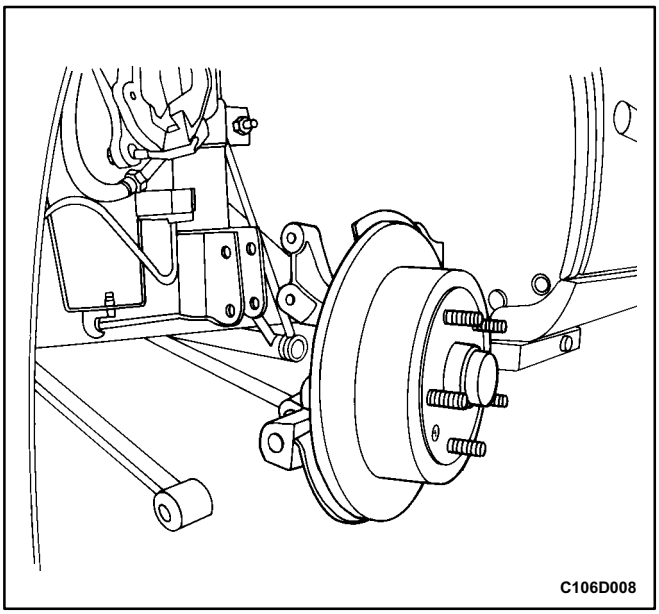

Installation Procedure

1. Install the rear knuckle into the vehicle.

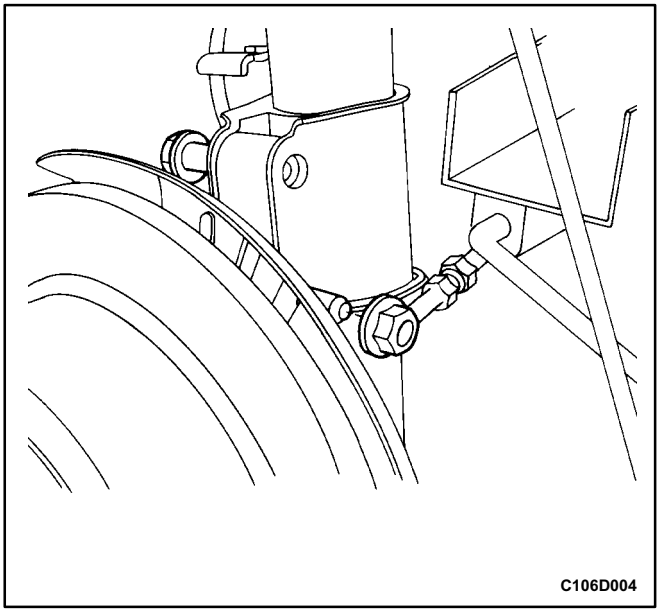

2. Install the knuckle to strut assembly bolts and nuts.

   Tighten

   Tighten the knuckle to strut assembly nuts to 135 N•m (100 lb•ft).
3. Connect the rear trailing link to the rear knuckle. Refer to „Trailing Links and Bracket" in this section.
4. Connect the front and rear parallel links to the knuckle. Refer to „Parallel Links" in this section.
5. Connect the parking brake to the knuckle assembly. Refer to *Section 4G, Parking Brake.*
6. Install the rear brake caliper onto the knuckle assembly and the clip holding the brake line to the strut assembly. Refer to *Section 4E, Rear Brakes.*
7. On vehicles equipped with the antilock braking system, install the ABS speed sensor. Refer to *Section 4F, Antilock Brake System and Traction Control System*.
8. Install the wheel. Refer to *Section 2E, Tires and Wheels*.
9. Lower the vehicle.

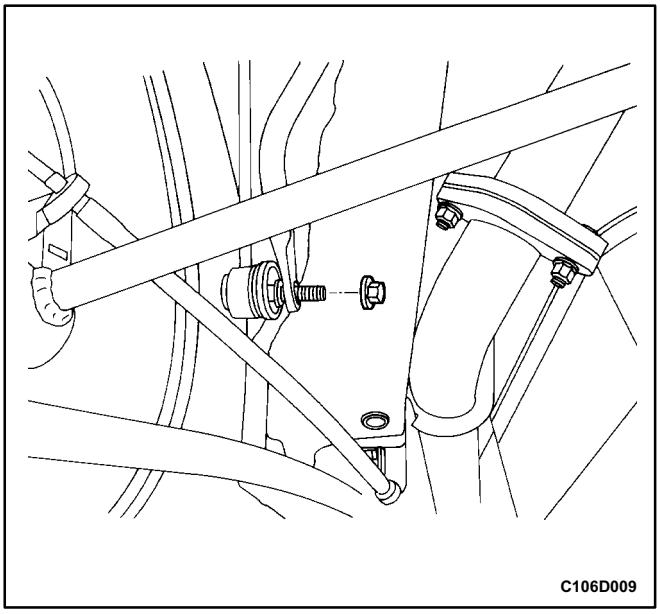

STABILIZER SHAFT AND INSULATORS

Removal Procedure

1. Raise and suitably support the vehicle.
2. Remove the stabilizer shaft to stabilizer link nuts.

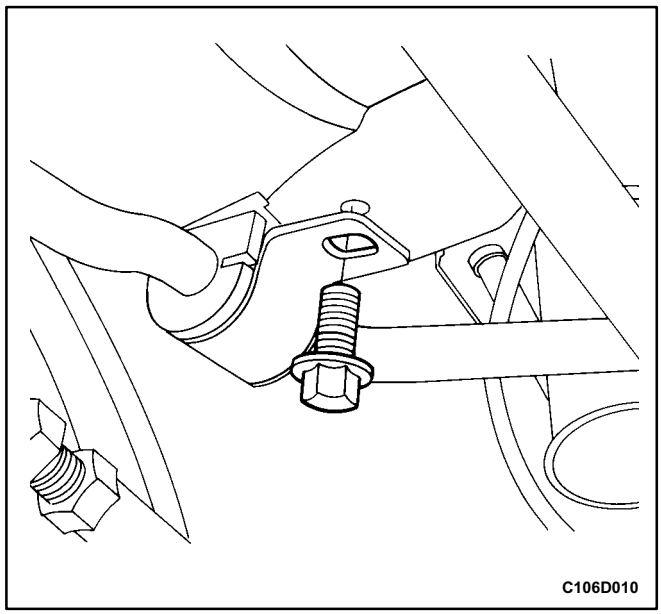

3. Remove the stabilizer shaft clamp bolts and stabilizer shaft clamp.
4. Remove the stabilizer shaft and insulators from the vehicle.

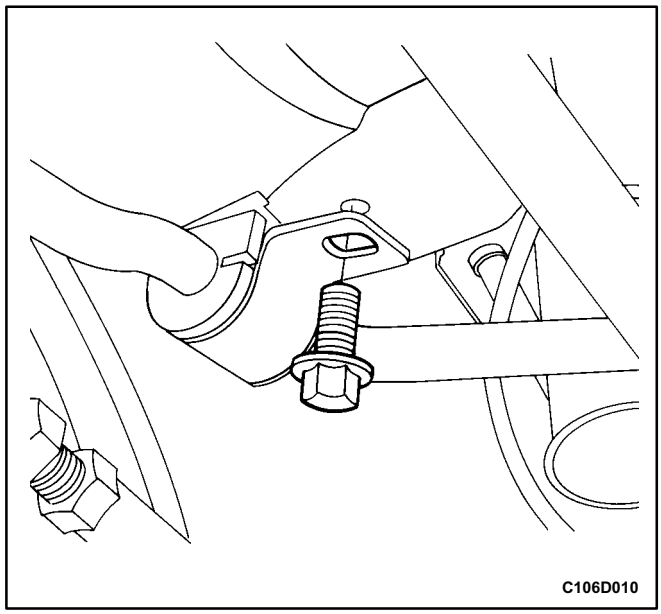

Installation Procedure

1. Install the stabilizer shaft and insulators into the vehicle.
2. Install the stabilizer shaft clamp and the stabilizer shaft clamp bolts. Do not tighten.

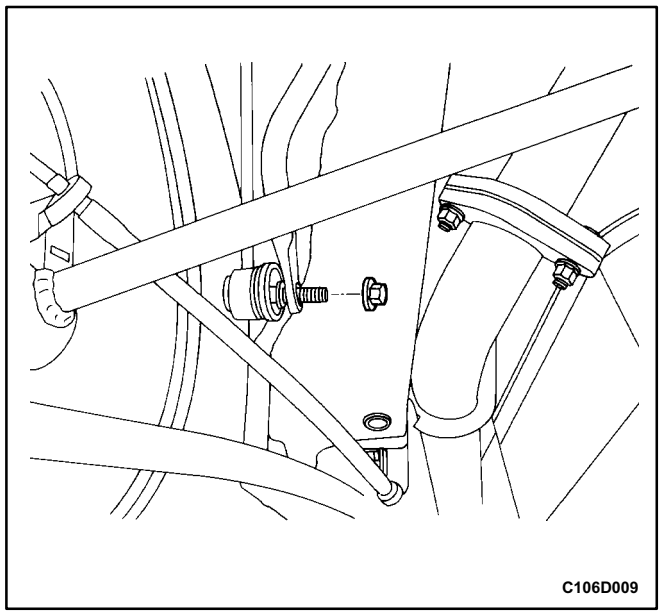

3. Connect the stabilizer shaft to the stabilizer link with the stabilizer shaft to stabilizer link nuts.

Tighten

Tighten the stabilizer shaft to stabilizer link nuts to 45 N•m (33 lb•ft).

Tighten

Tighten the stabilizer shaft clamp bolts to 37 N•m (27 lb•ft).

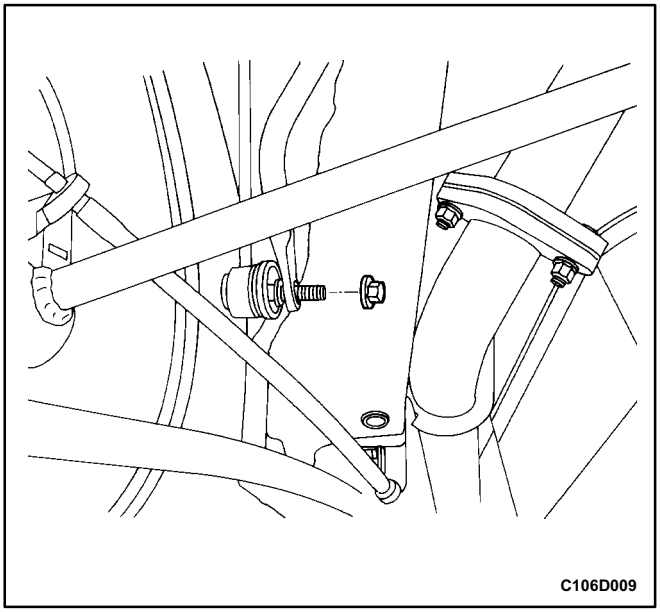

STABILIZER LINK

Removal Procedure

1. Raise and suitably support the vehicle.
2. Remove the stabilizer shaft•to•stabilizer link nut.

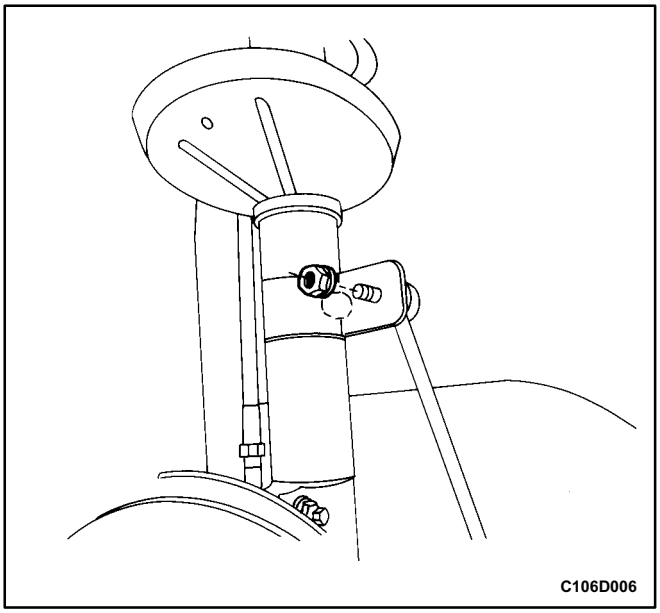

3. Remove the stabilizer shaft link to strut assembly nut.

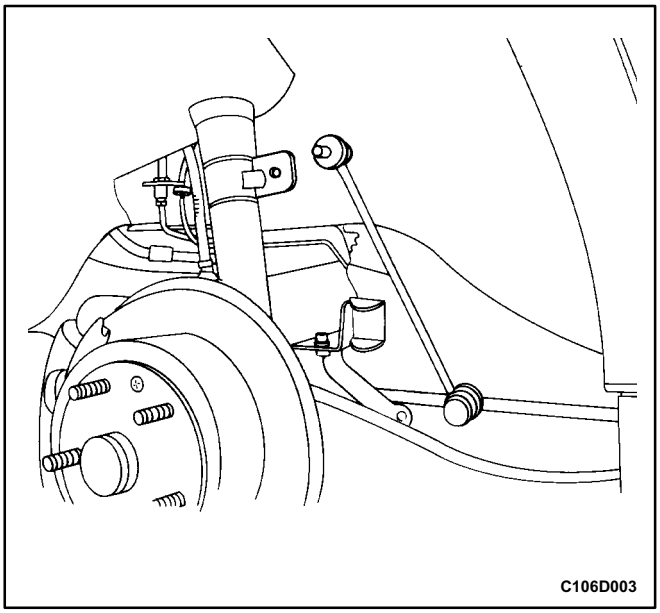

4. Remove the stabilizer link.

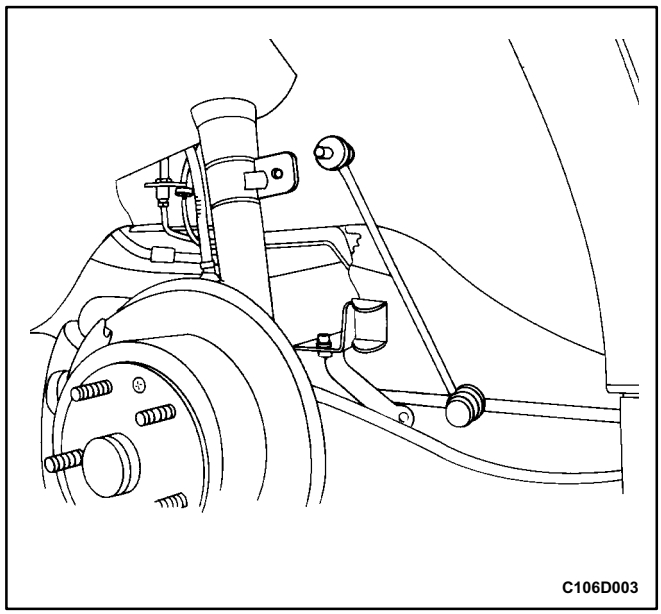

Installation Procedure

1. Install the stabilizer link.

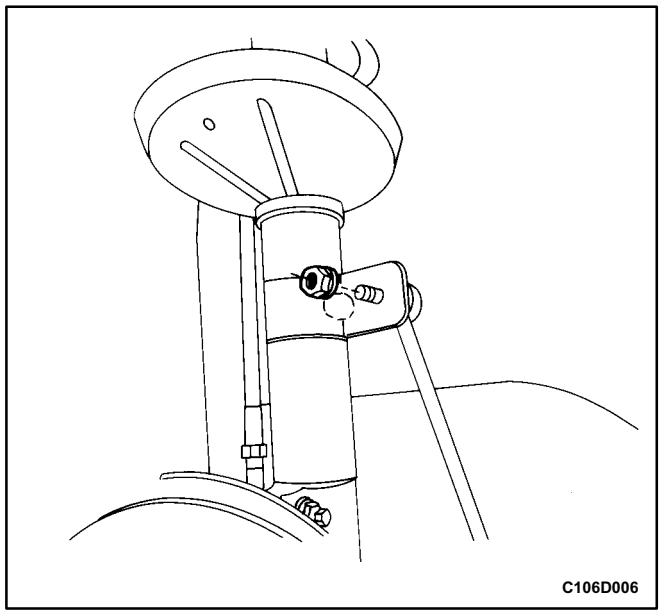

2. Connect the stabilizer link to the strut assembly with the stabilizer link to strut assembly nut. Do not tighten.
3. Connect the stabilizer link to the stabilizer shaft with the stabilizer shaft to stabilizer link nut.

Tighten

Tighten the stabilizer link to strut assembly nut to 45 N•m (33 lb ft).

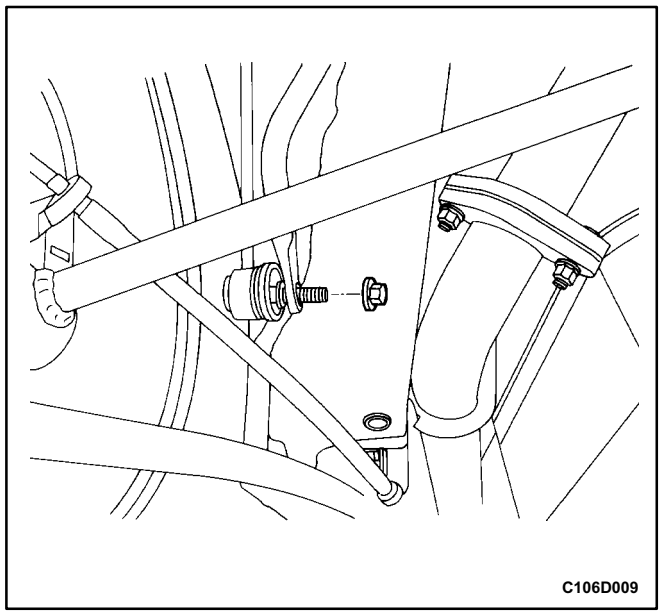

Tighten

Tighten the stabilizer shaft to stabilizer link nut to 45 N•m (33 lb ft).

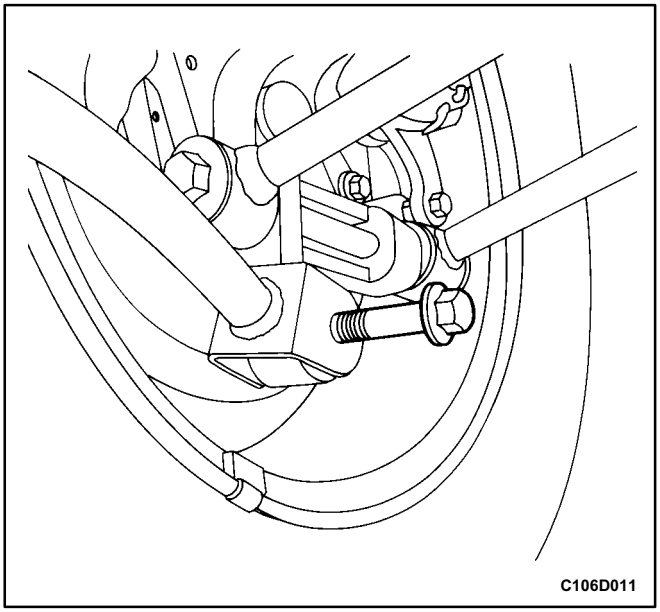

TRAILING LINK AND BRACKET

Removal Procedure

1. Raise and suitably support the vehicle.
2. Remove the rear trailing link to rear knuckle bolt.

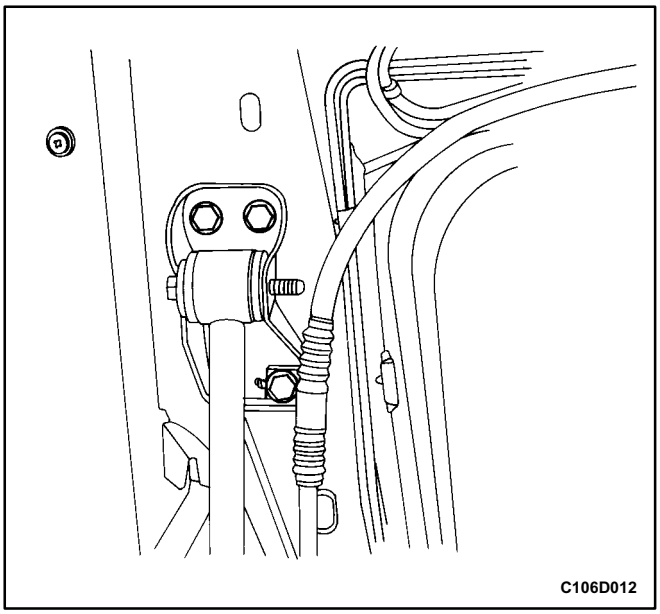

3. Remove the rear trailing link bracket to body bolts.

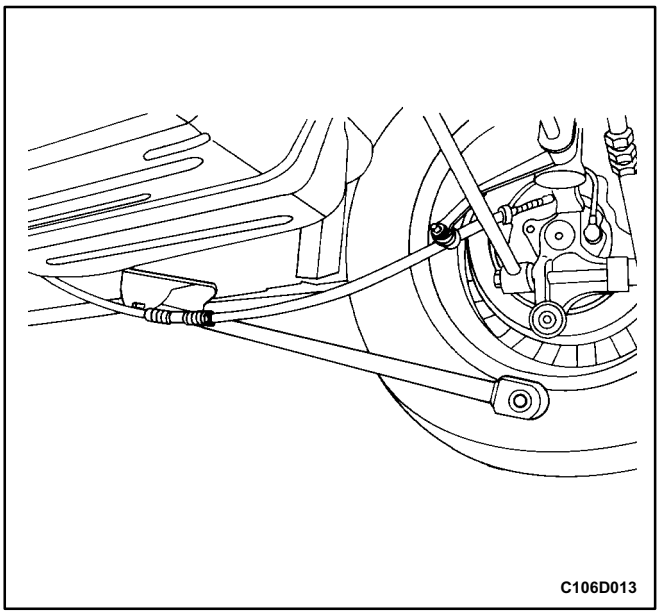

4. Remove the rear trailing link and bracket.

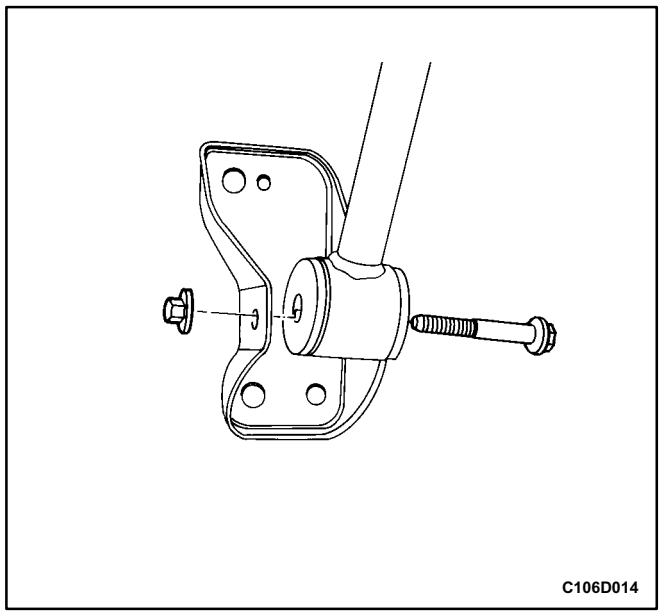

5. Remove the trailing link bracket nut and bolt.
6. Separate the trailing link from the trailing link bracket.

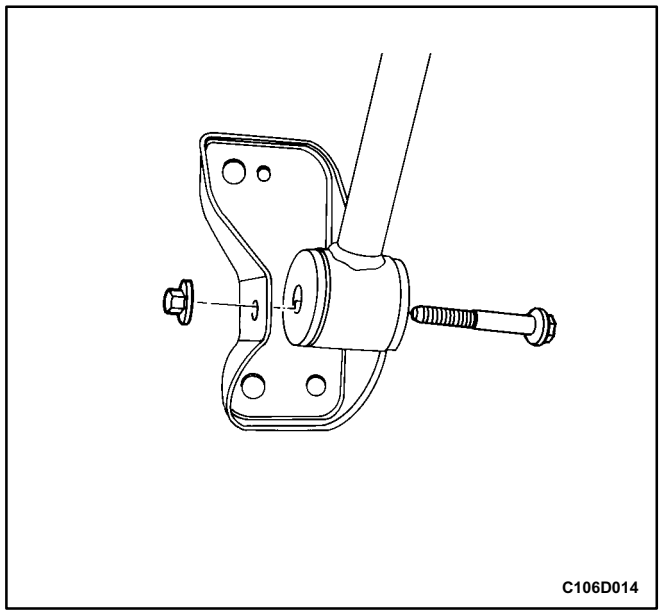

Installation Procedure

1. Connect the trailing link and the trailing link bracket.
2. Install the rear trailing link bracket nut and bolt.

Tighten

Tighten the trailing link to trailing link bracket nut to 100 N•m (73 lb•ft).

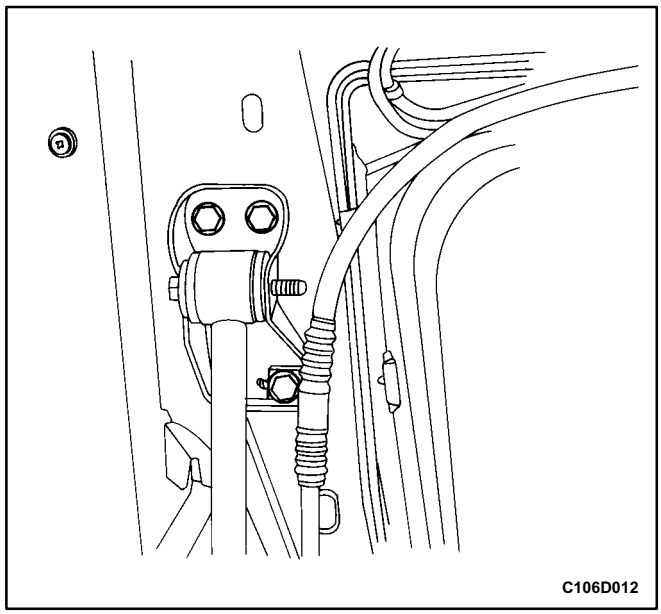

3. Install the rear trailing link and bracket into the vehicle.
4. Install the trailing link bracket to body bolts.

Tighten

Tighten the rear trailing link bracket to body bolts to 90 N•m (66 lb•ft).

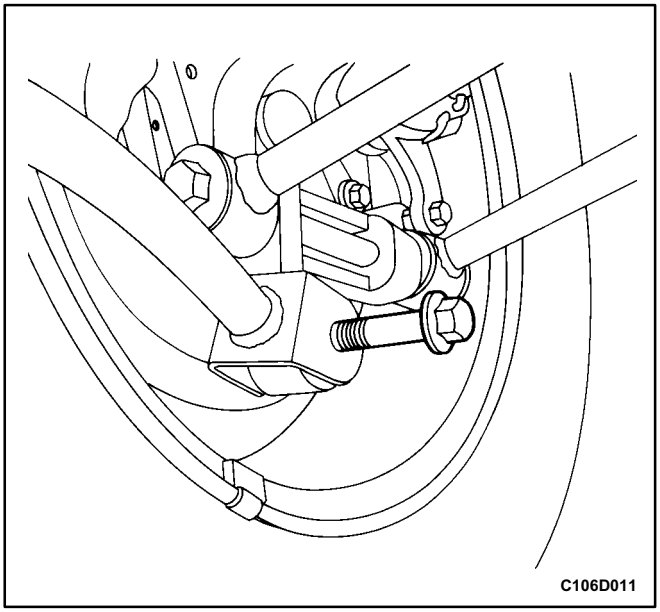

5. Install the trailing link to knuckle bolt.

   Tighten

   Tighten the rear trailing link to knuckle bolt to 120 N•m (89 lb•ft).

6. Lower the vehicle.

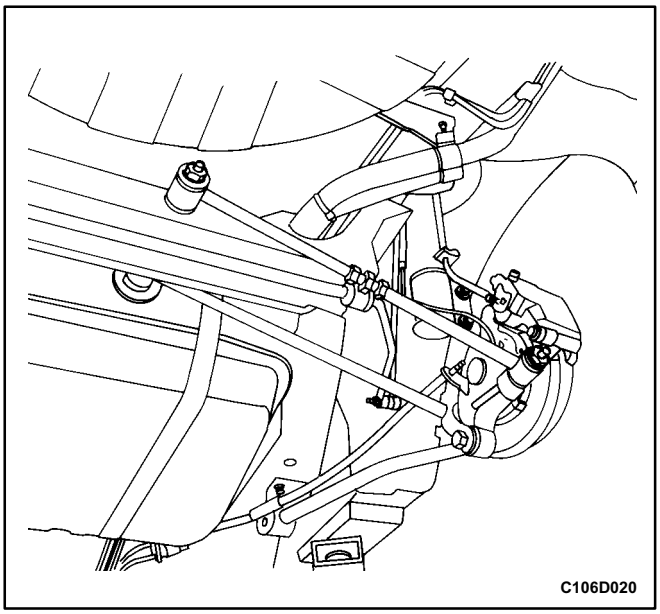

PARALLEL LINKS

Removal Procedure

1. Raise and suitably support the vehicle.
2. Remove the wheel. Refer to *Section 2E, Tires and Wheels*.
3. Loosen all of the bolts that connect the front and rear parallel links to the knuckle and the rear crossmember.

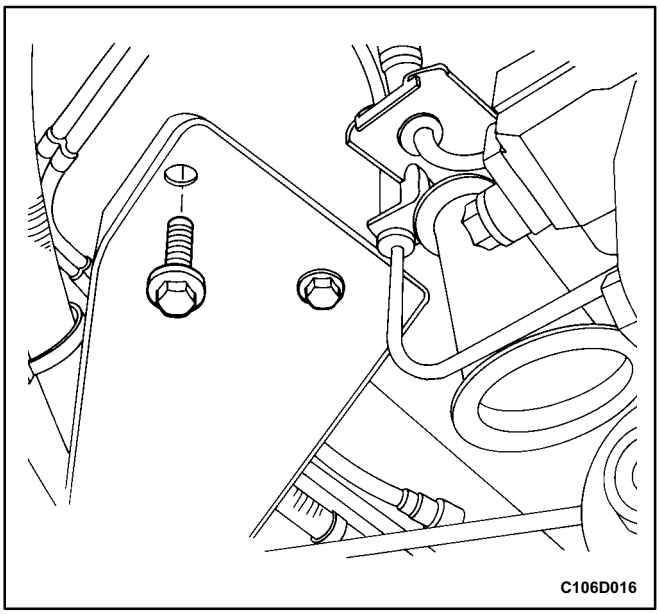

4. Remove the rear crossmember to body bolts.

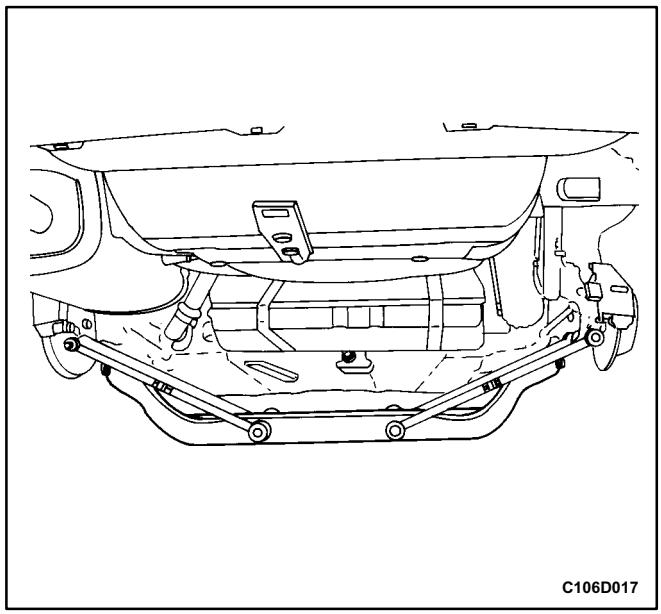

5. Lower the rear crossmember.

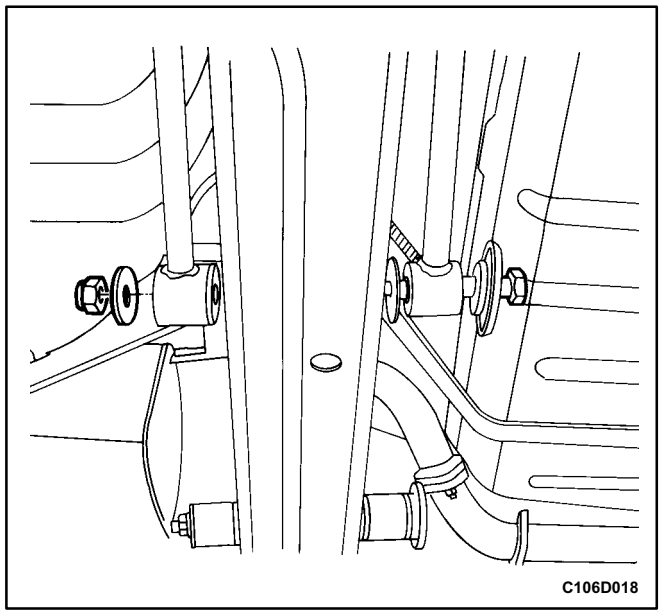

6. Remove the parallel link bolt from the rear crossmember.

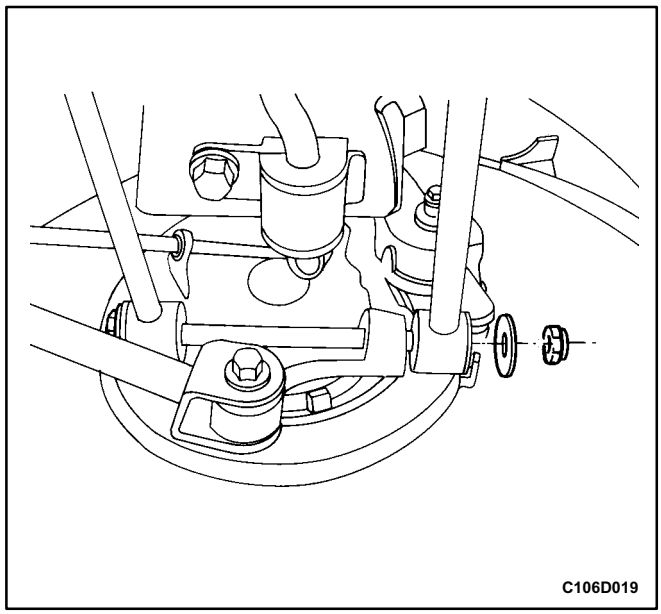

7. Remove the parallel link bolt from the rear knuckle.
8. Remove the front and rear parallel links.

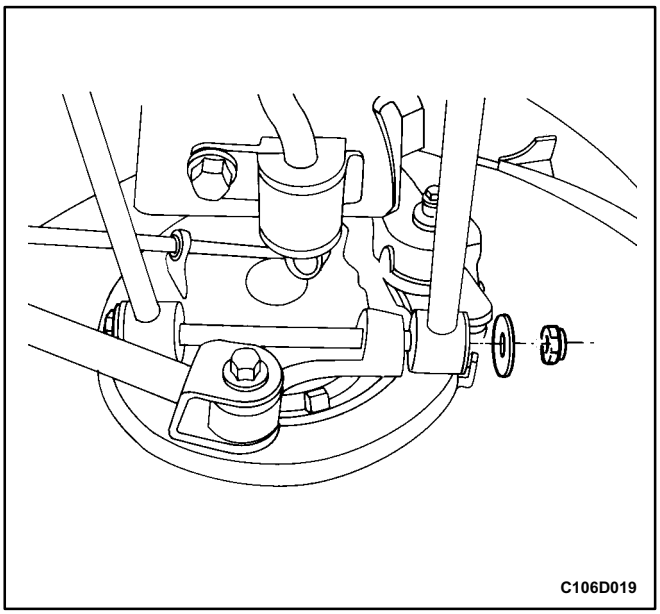

Installation Procedure

1. Install the front and rear parallel links.
2. Install the parallel link bolt onto the rear knuckle.

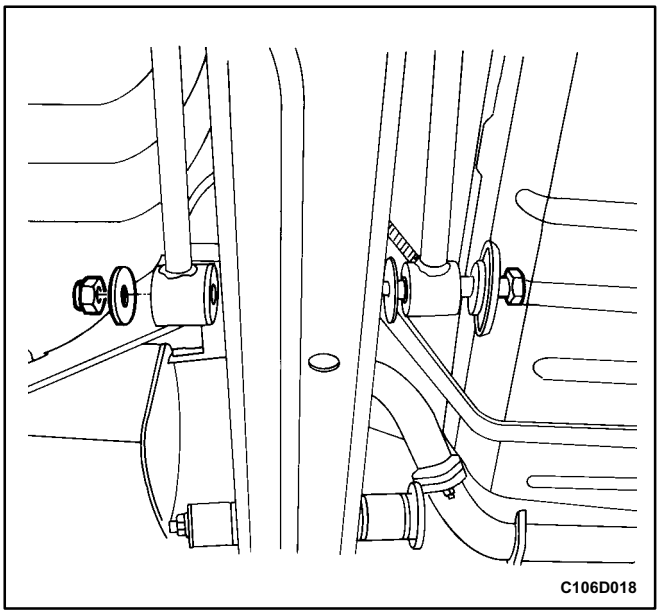

3. Install the parallel link bolt onto the rear crossmember.

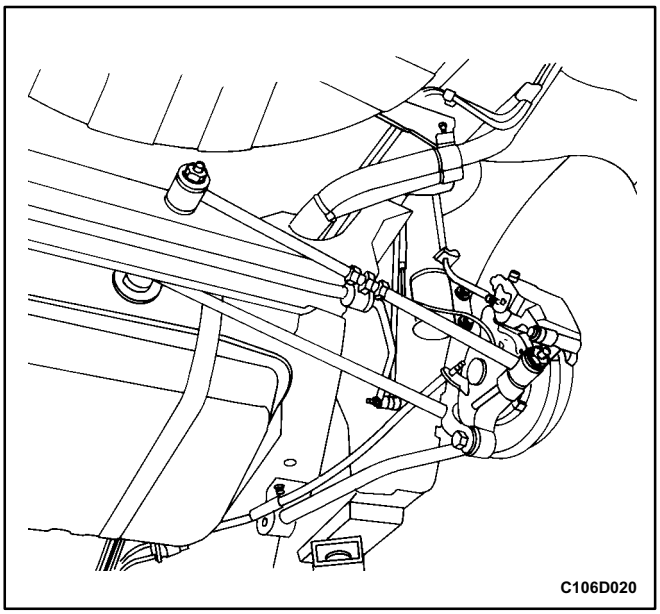

4. Raise the crossmember and install the rear crossmember to body bolts.

Tighten

Tighten the crossmember to body bolts to 110 N•m (81 lb•ft).

Tighten the parallel link to cross member nut to 120 N.m (89 lb•ft) and the parallel link to knuckle nut to 135 N•m (100 lb•ft).

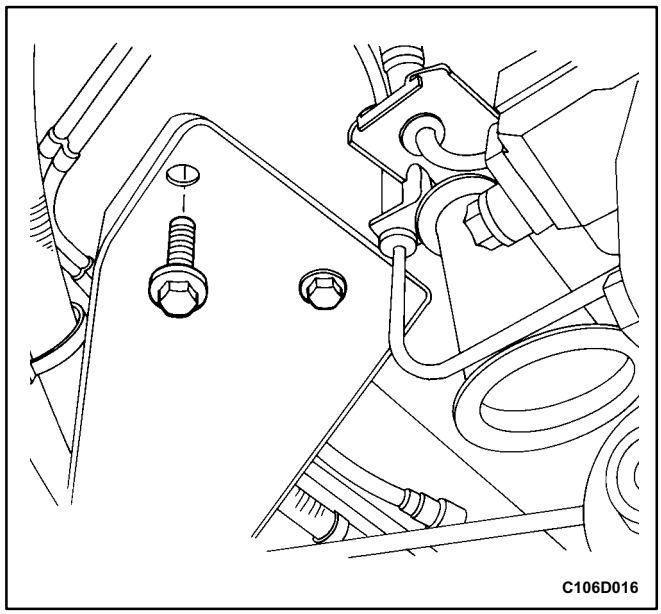

5. Install the wheel. Refer to *Section 2E, Tires and Wheels*.
6. Perform a rear toe adjustment. Refer to *Section 2B, Wheel Alignment*.

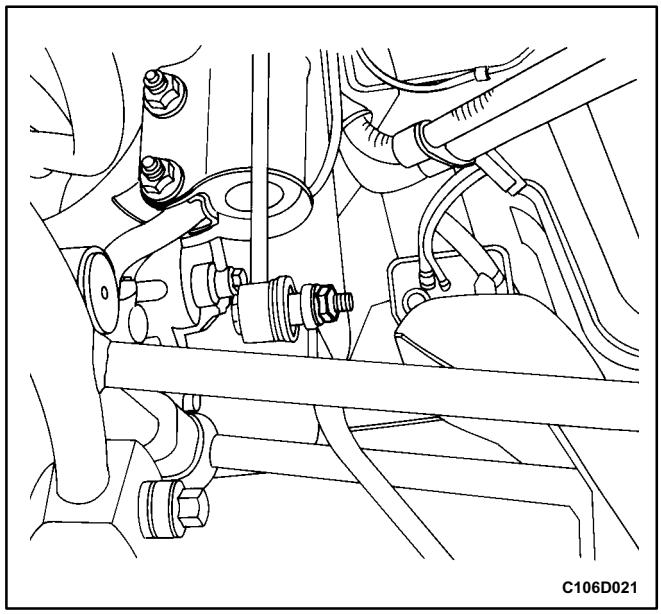

CROSSMEMBER

Removal Procedure

1. Raise and suitably support the vehicle.
2. Remove the parallel links. Refer to „Parallel Links” in this section.
3. Remove the stabilizer shaft to stabilizer link nuts and remove the rear crossmember.

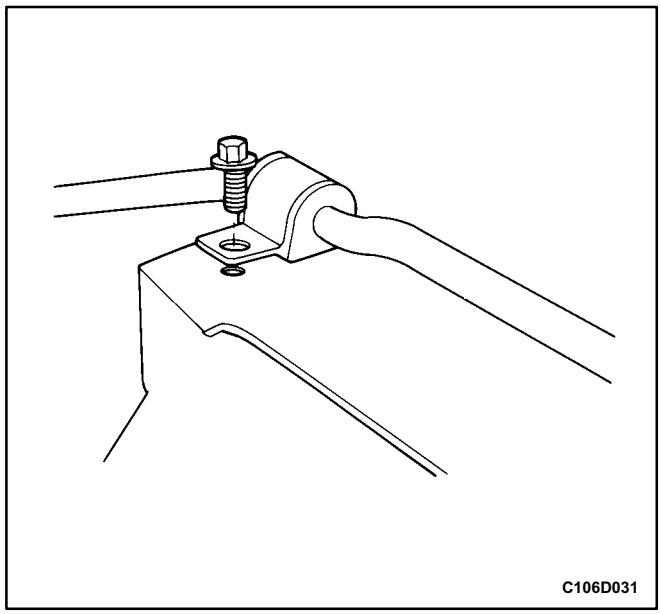

4. Remove the stabilizer shaft clamp bolts and remove the stabilizer shaft and insulators from the rear crossmember.

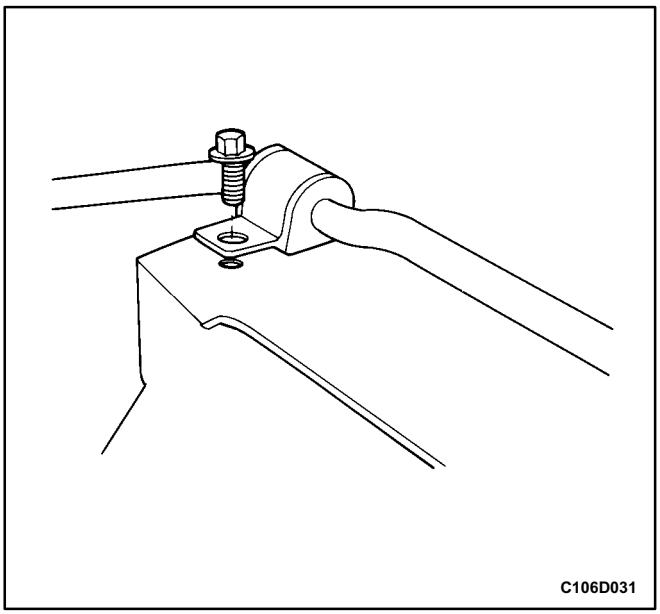

Installation Procedure

1. Install the stabilizer shaft and insulators and secure with the stabilizer shaft clamps and bolts.

   Tighten

   Tighten the stabilizer shaft clamp bolts to 37 N•m (27 lb•ft).

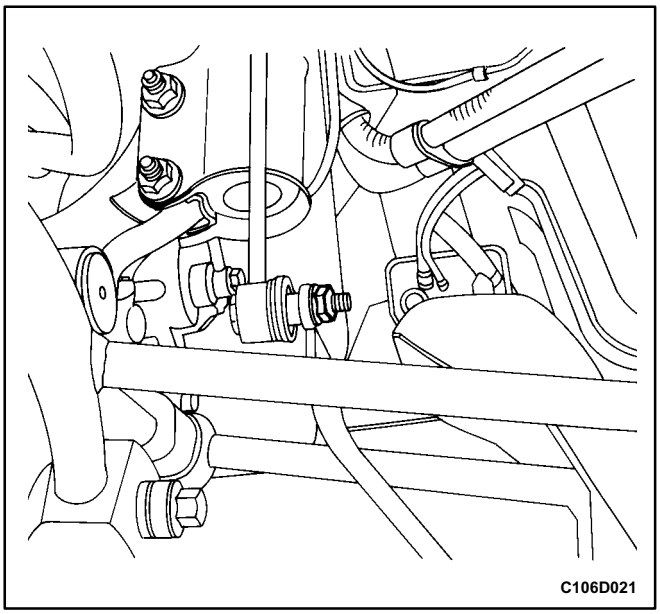

2. Install the rear crossmember and connect the stabilizer shaft to the stabilizer links.
3. Install the stabilizer shaft to stabilizer link nuts.

   Tighten

   Tighten the stabilizer shaft to stabilizer link nuts to 45 N•m (33 lb•ft).
4. Install the parallel links. Refer to „Parallel Links" in this section.
5. Lower the vehicle.

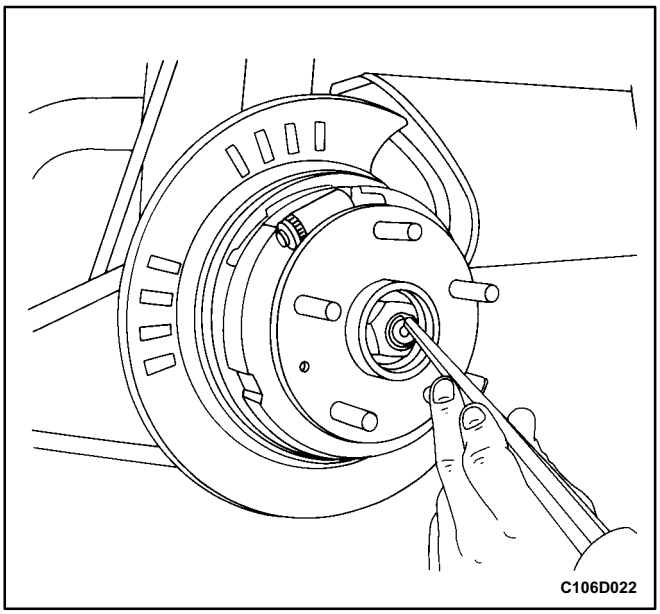

HUB AND BEARING ASSEMBLY

Removal Procedure

1. Raise and suitably support the vehicle.
2. Remove the wheel. Refer to *Section 2E, Tires and Wheels*.
3. Remove the rear brake caliper and rear brake rotor. Refer to *Section 4E, Rear Brakes*.
4. Remove the dust cap and straighten the indent in the caulking nut with a drift and a hammer.

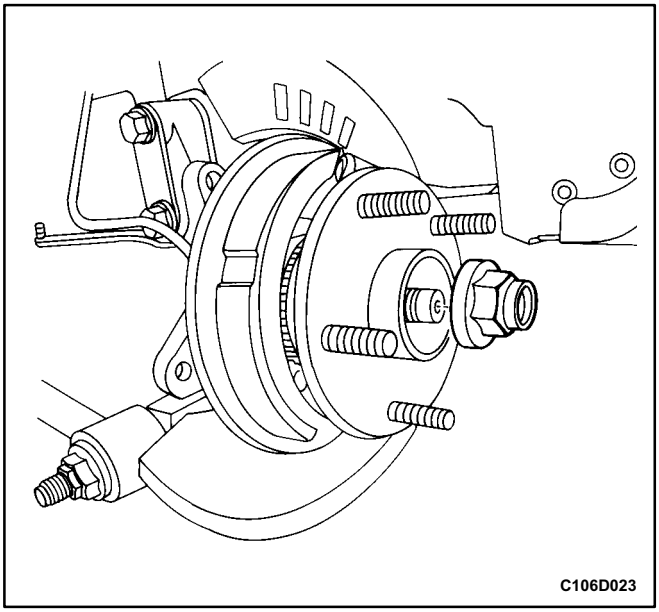

5. Remove the caulking nut.

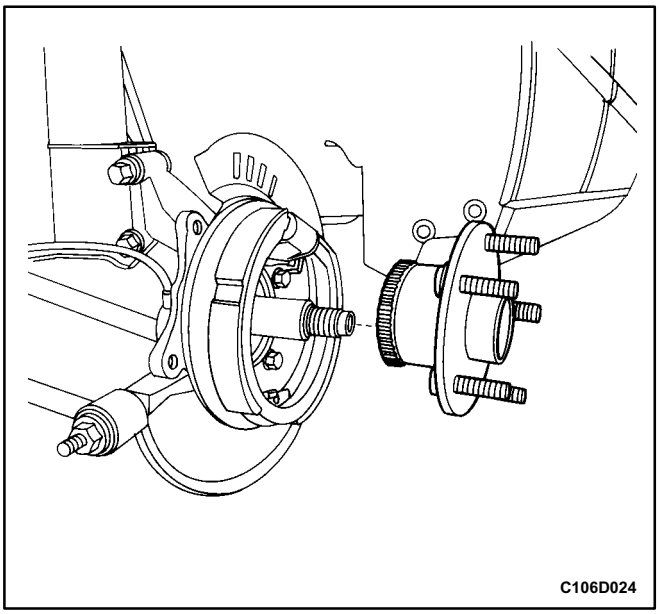

6. Remove the hub and bearing assembly.

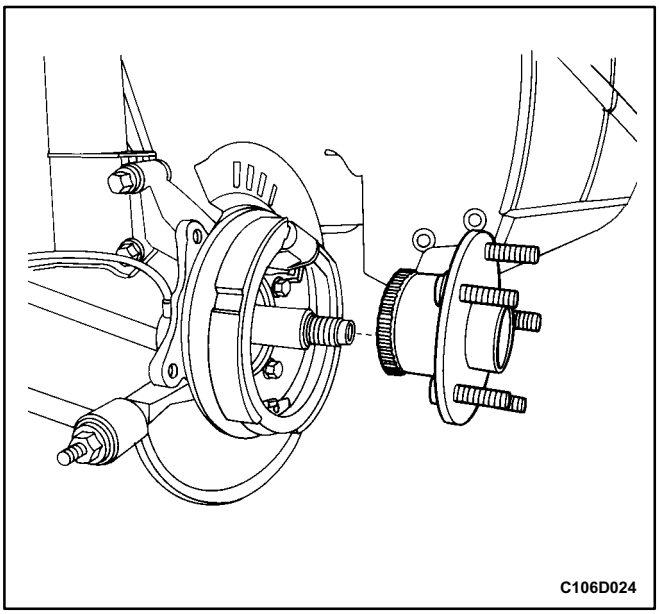

Installation Procedure

1. Install the hub and bearing assembly.

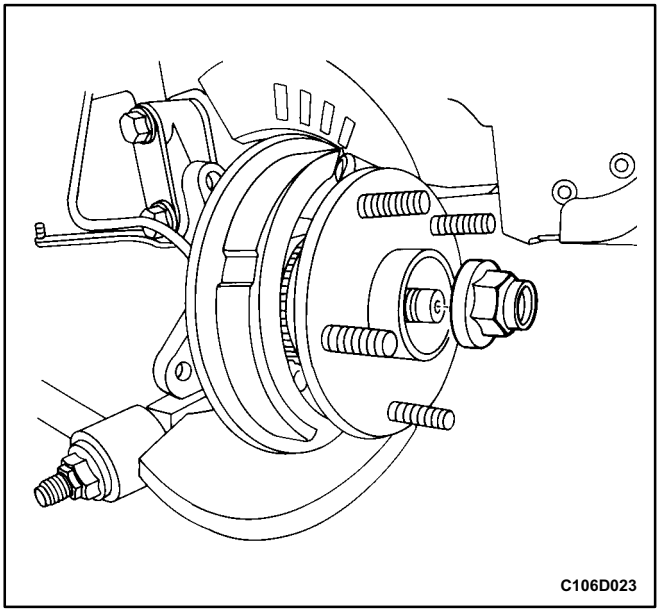

2. Install a new caulking nut.

Tighten

Tighten the caulking nut to 285 N•m (210 lb•ft).

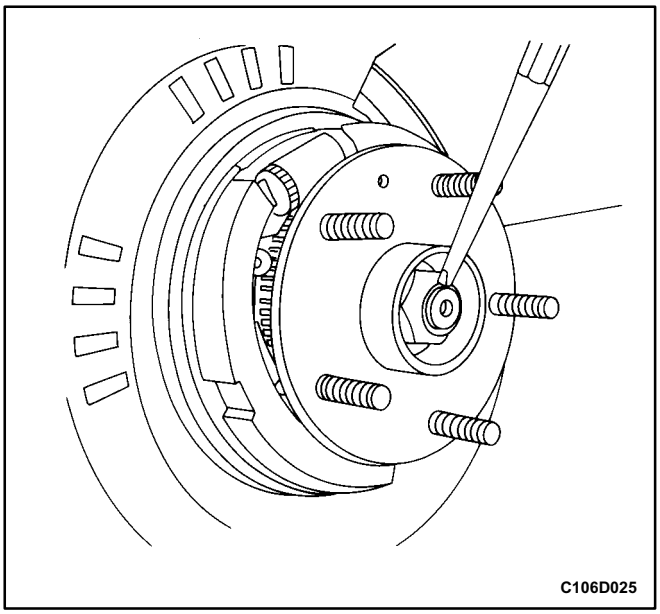

3. Indent the caulking nut onto the spindle.
4. Install the rear brake rotor and rear brake caliper. Refer to *Section 4E, Rear Brakes*.
5. Install the wheel. Refer to *Section 2E, Tires and Wheels*.
6. Lower the vehicle.

UNIT REPAIR

SPRINGS AND INSULATORS

Tools Required

KM-329-A Spring Compressor

Disassembly Procedure

1. Remove the rear strut assembly from the vehicle. Refer to „Strut Assembly” in this section.
2. Mount the rear strut assembly into the spring compressor KM-329-A. Ensure that the hooks are properly seated.

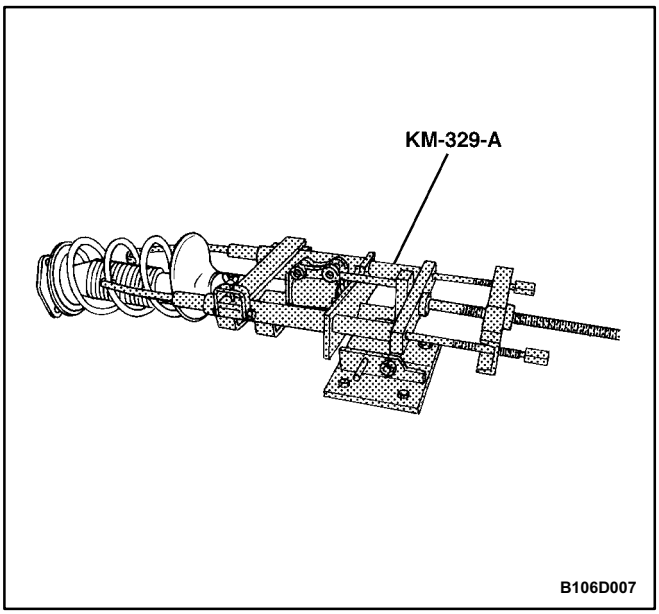

3. Compress the spring.
4. Remove the lock nut from the strut dampener rod.

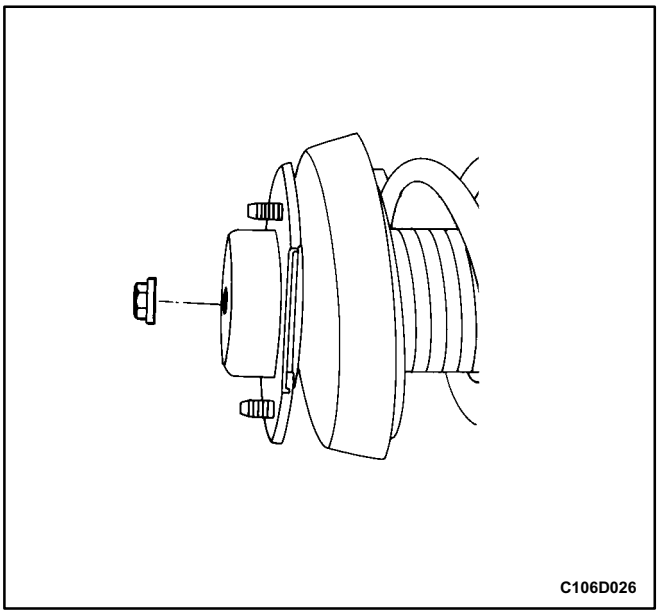

5. Remove the rear strut mount.

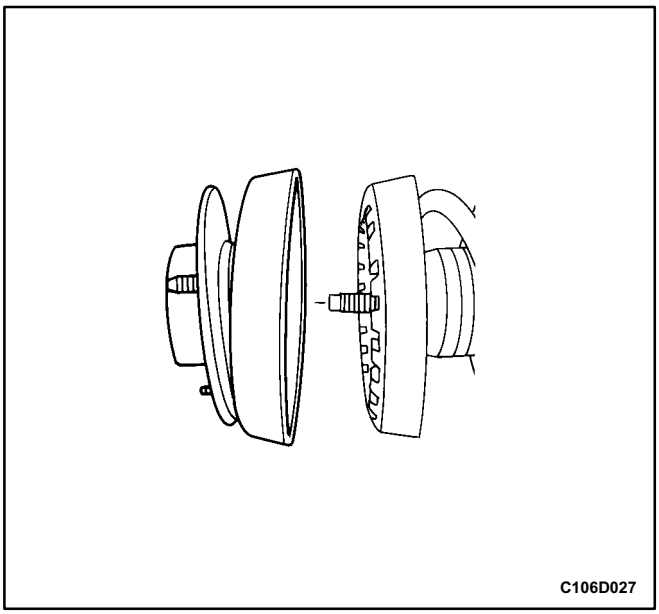

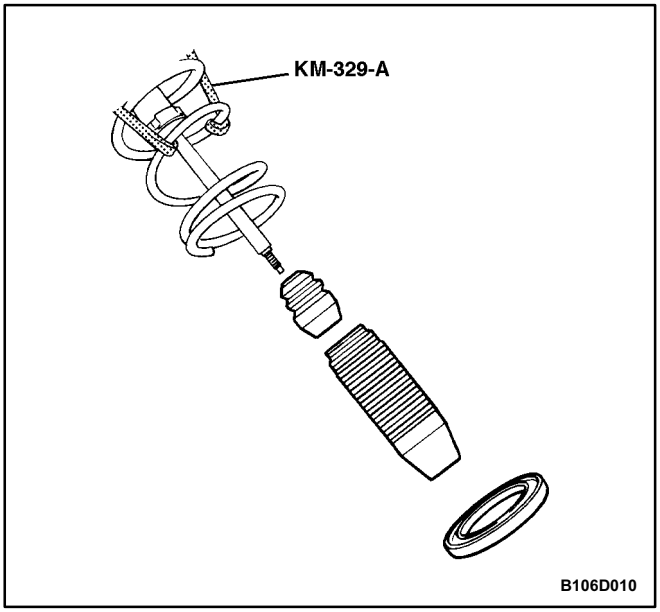

6. Remove the rear spring upper insulator, the dust cover, and the hollow bumper.

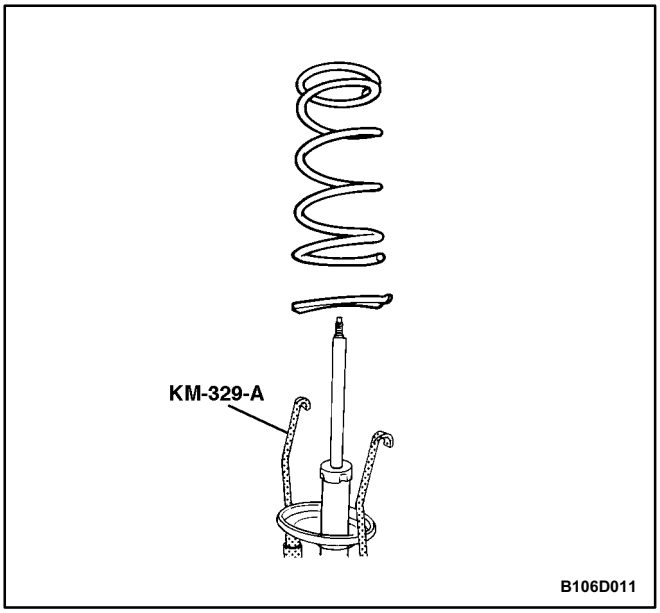

7. Release the spring.
8. Remove the rear spring and the rear spring lower insulator.

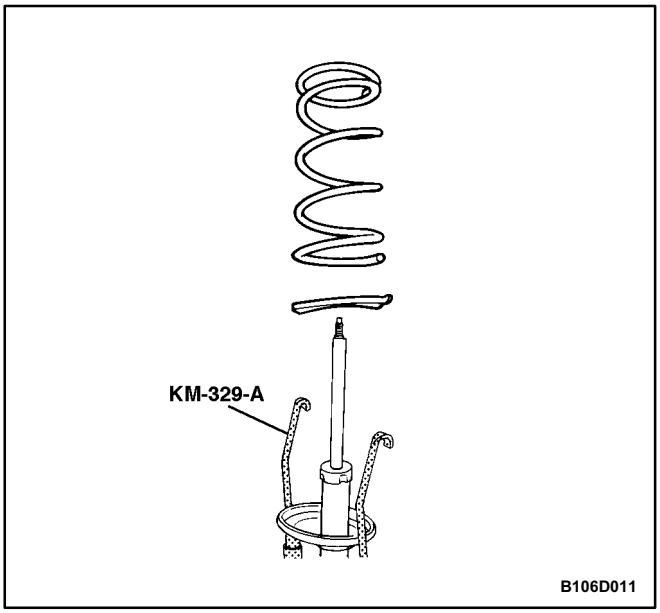

Assembly Procedure

1. Install the rear spring lower insulator and the rear spring.

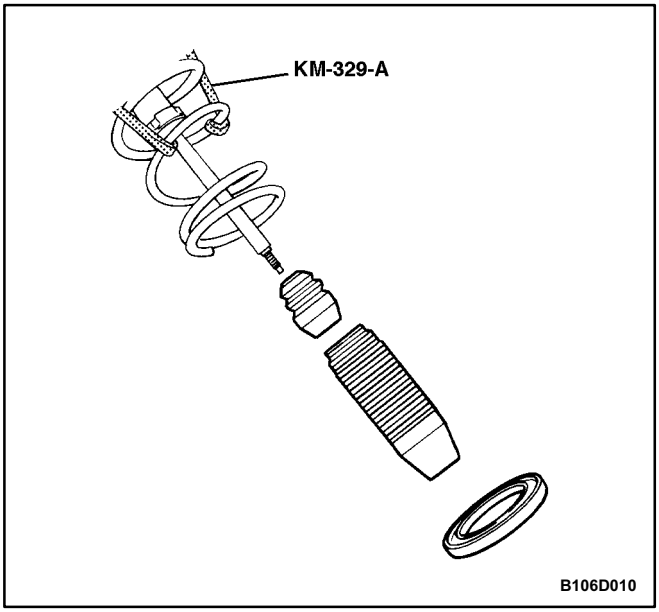

2. Compress the spring.
3. Install the hollow bumper, the dust cover, and the rear spring upper insulator.

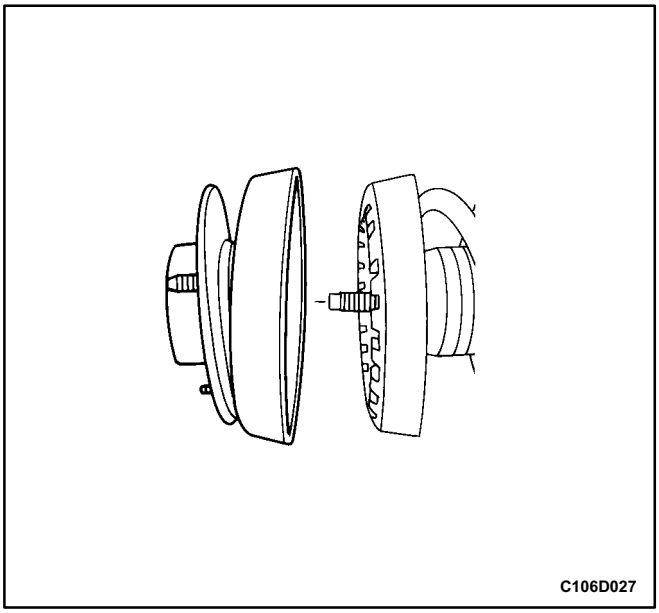

4. Install the rear strut mount.

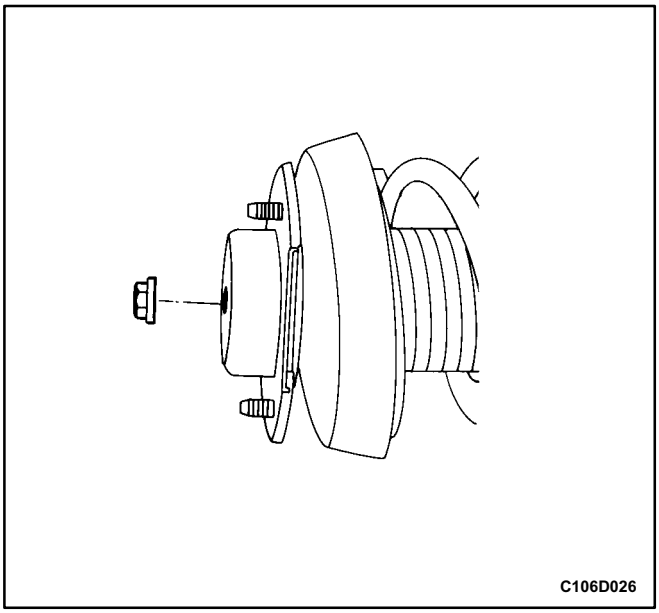

5. Install the lock nut onto the strut dampener rod.

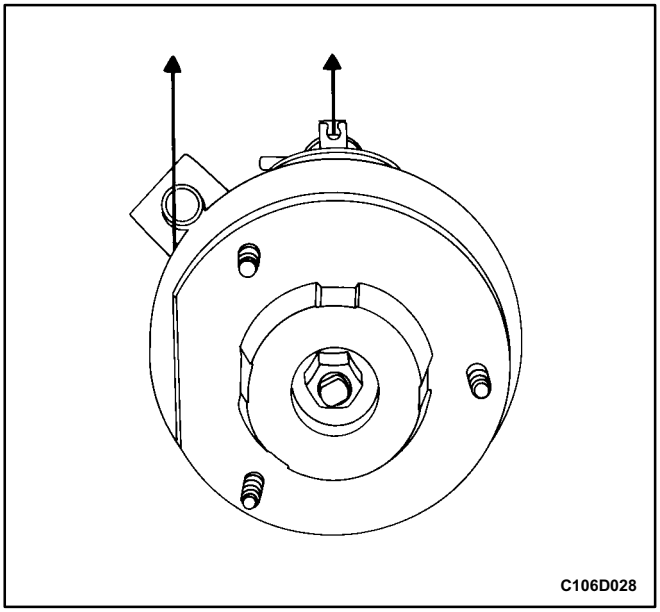

6. Align the flat side of the strut mount with the ABS sensor line bracket on the strut dampener so that the two are parallel to each other.

   Tighten

   Tighten the damper rod to strut mount nut to 80 N•m (59 lb•ft).
7. Release the spring.
8. Remove the strut assembly from the spring compressor and install the strut assembly into the vehicle. Refer to „Strut Assembly" in this section.

KNUCKLE

Disassembly Procedure

Important: To facilitate the removal of the caulking nut, it should be loosened before the knuckle is removed from the vehicle. Refer to „Hub and Bearing Assembly" in this section.

1. Remove the knuckle from the vehicle. Refer to „Knuckle Assembly" in this section.
2. Remove the brake caliper and brake rotor. Refer to *Section 4E, Rear Brakes*.
3. Remove the dust cap, the caulking nut, and the hub and bearing assembly. Refer to „Hub and Bearing Assembly" in this section.
4. Remove the rear disc brake assembly. Refer to *Section 4E, Rear Brakes*.
5. Remove the brake splash shield. Refer to *Section 4E, Rear Brakes.*

Assembly Procedure

1. Install the brake splash shield. Refer to *Section 4E, Rear Brakes.*
2. Install the rear disc brake assembly. Refer to *Section 4E, Rear Brakes*.
3. Install the hub and bearing assembly, the caulking nut, and the dust cap. Refer to „Hub and Bearing Assembly" in this section.
4. Install the brake caliper and brake rotor. Refer to *Section 4E, Rear Brakes*.
5. Install the knuckle into the vehicle. Refer to „Knuckle Assembly" in this section.

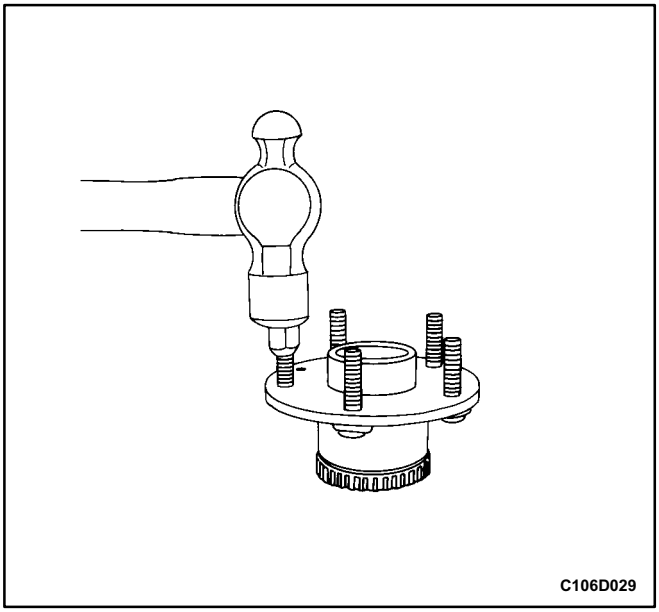

HUB AND BEARING

Important: The rear bearings are not serviceable. If the bearings must be replaced, the hub and bearing assembly must be replaced as a unit.

Disassembly Procedure

1. Raise and suitably support the vehicle.
2. Remove the hub and bearing assembly from the vehicle. Refer to „Hub and Bearing Assembly" in this section.
3. Use a hammer to drive out any damaged hub studs.

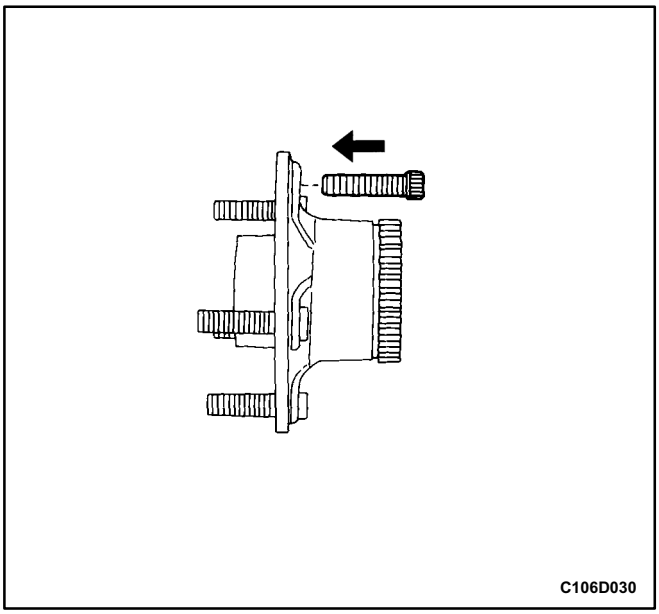

Assembly Procedure

1. Replace any damaged hub studs with a new hub stud.

GENERAL DESCRIPTION AND SYSTEM OPERATION

REAR SUSPENSION

The rear suspension is fully independent, consisting of a crossmember with four parallel links, two trailing links, two strut assemblies with coil springs and insulators, and two knuckles containing the hub and bearing assemblies. The strut assemblies support the weight of the vehicle using coil springs positioned around the strut dampeners. The coil springs are seated on insulators attached to the upper mount and the lower spring seat of the strut assembly. The parallel links and the trailing link bracket have rubber isolator bushings at each end and are attached to the crossmember and the knuckle. The rear parallel link is attached to the crossmember through adjustment cams that are used to adjust rear toe. The trailing links are attached to the body, through the trailing link bracket, and the bottom of the knuckle. A forged knuckle bolts to each strut assembly. Lateral movement of the knuckle is controlled by the parallel links. Fore and aft movement of the knuckle is controlled by the trailing link.